Prototype mechanics for PARIS cluster

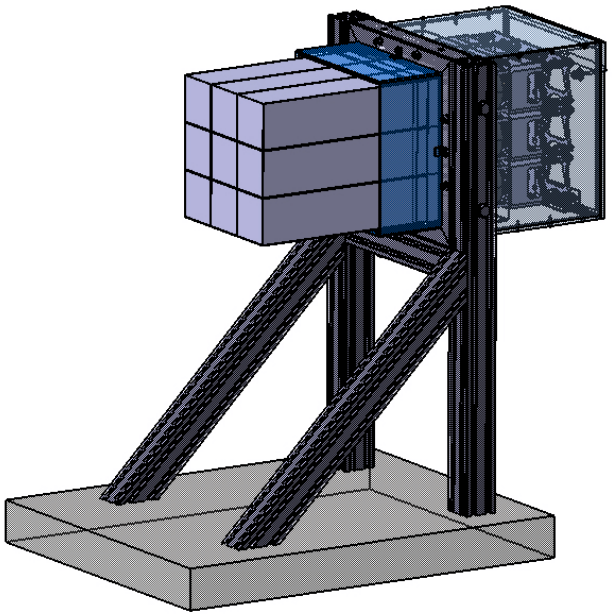

Unité mixte de recherche
CNRS-IN2P3
Université Paris-Sud 11

91406 Orsay cedex
Tél. : +33 1 69 15 73 40
Fax : +33 1 69 15 64 70
http://ipnweb.in2p3.fr

Crystal mechanicals specifications

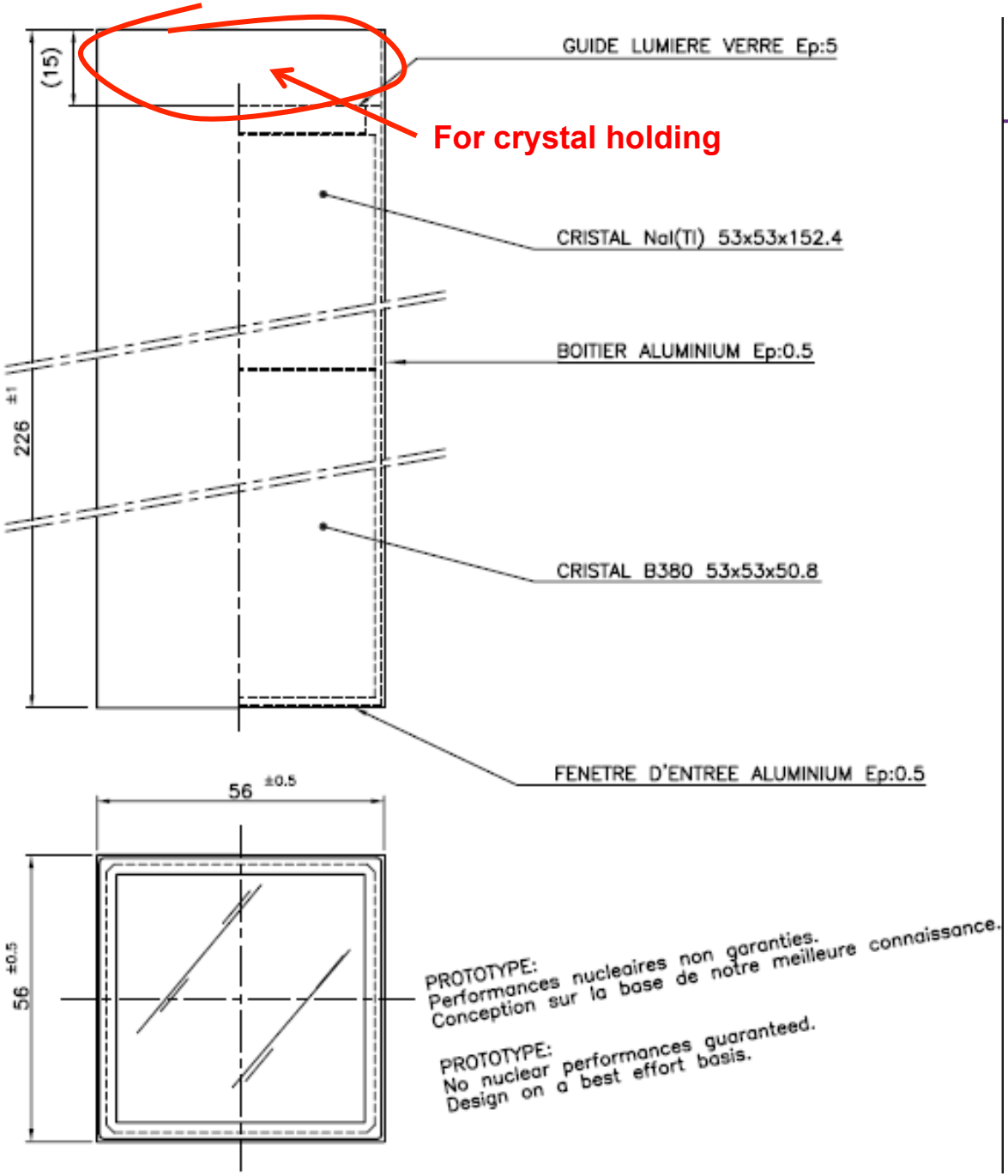

Detector mechanics

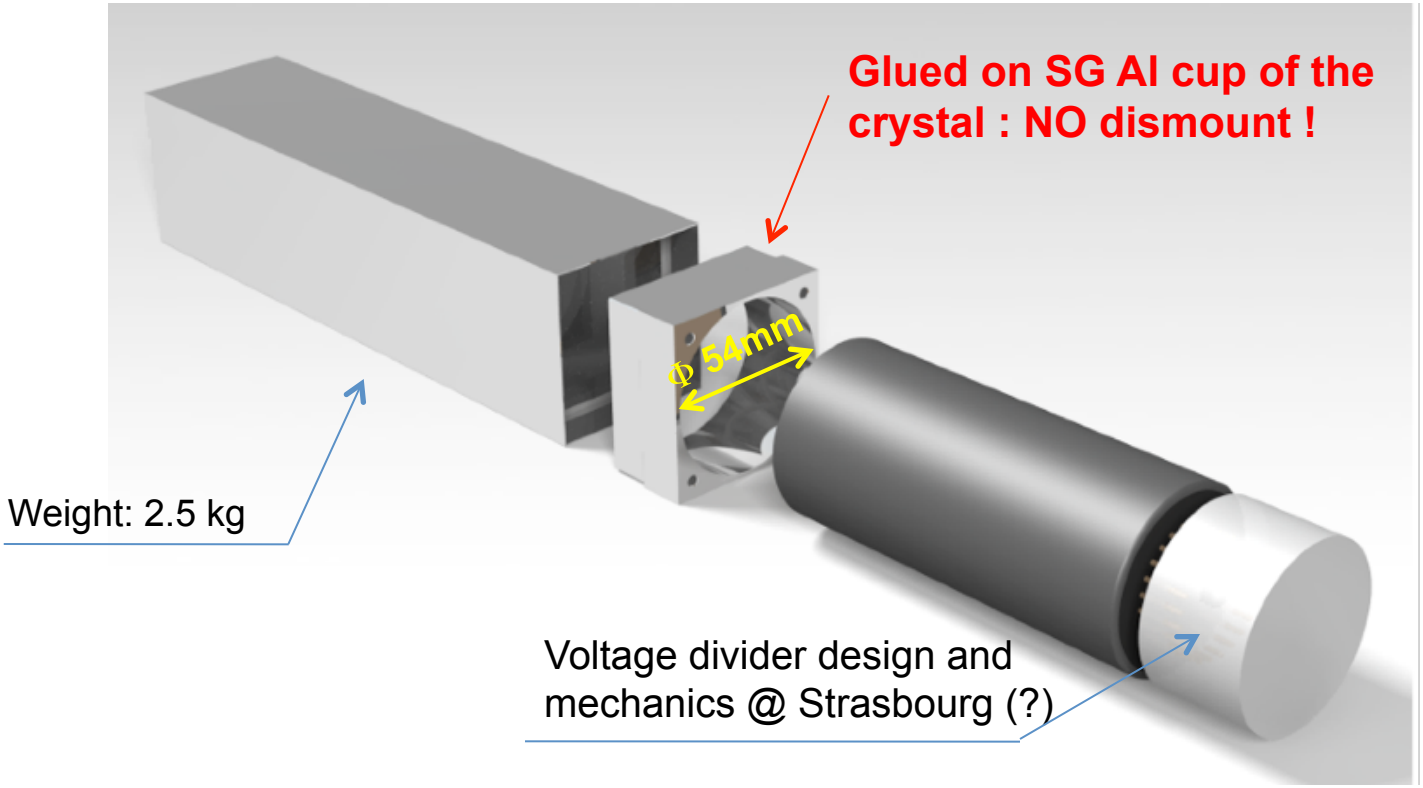

-If decision to keep the this fit-in piece for all PARIS crystals

→ ask SG to provide it already on the crystal

- the fit-in piece limits the geometry of the PM Tubes: cylindrical and 2”

- if we use optical glue → impossible to remove the PMT ⇒ need optical grease or pad

Cluster General view

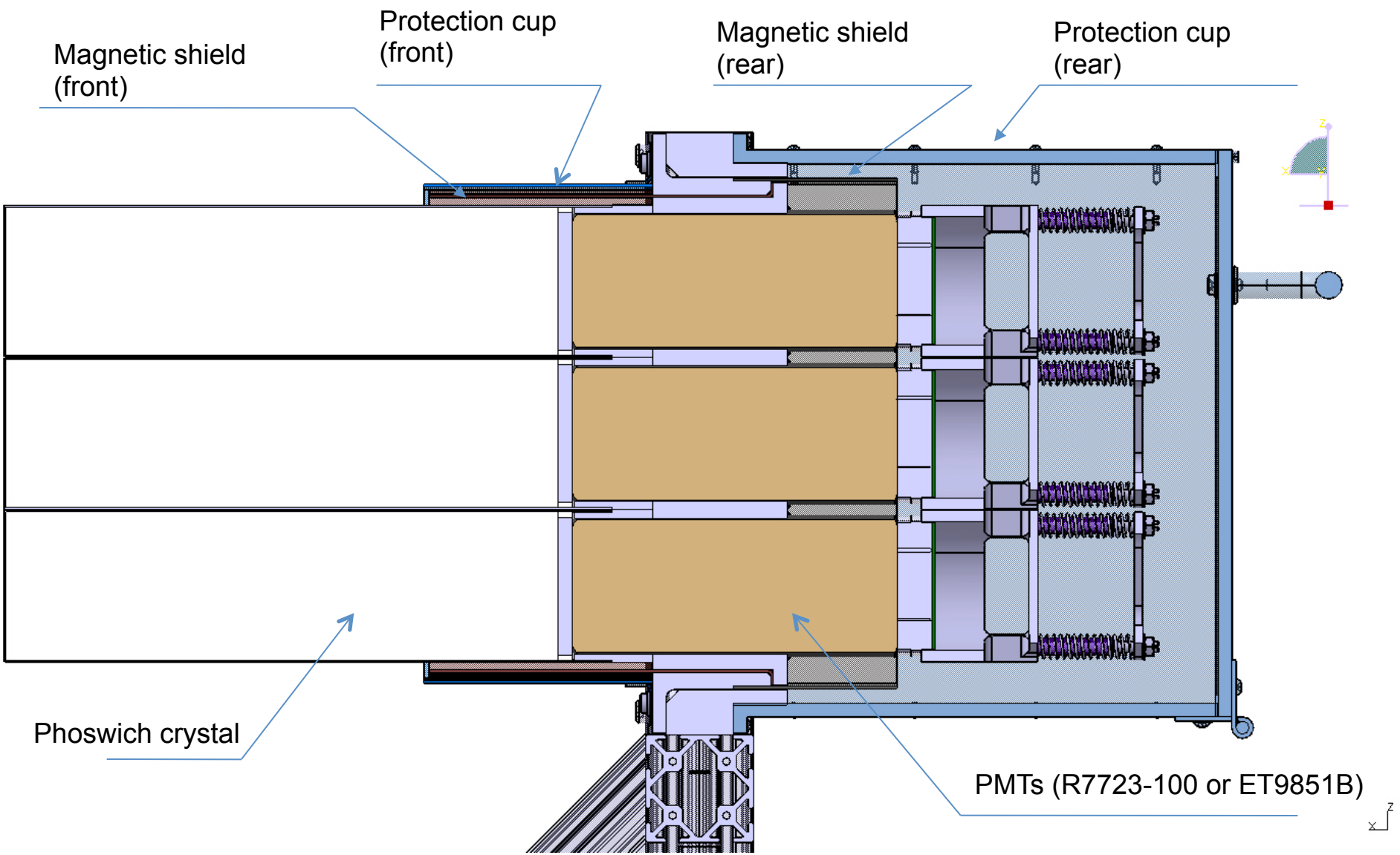

Mounting of the cluster

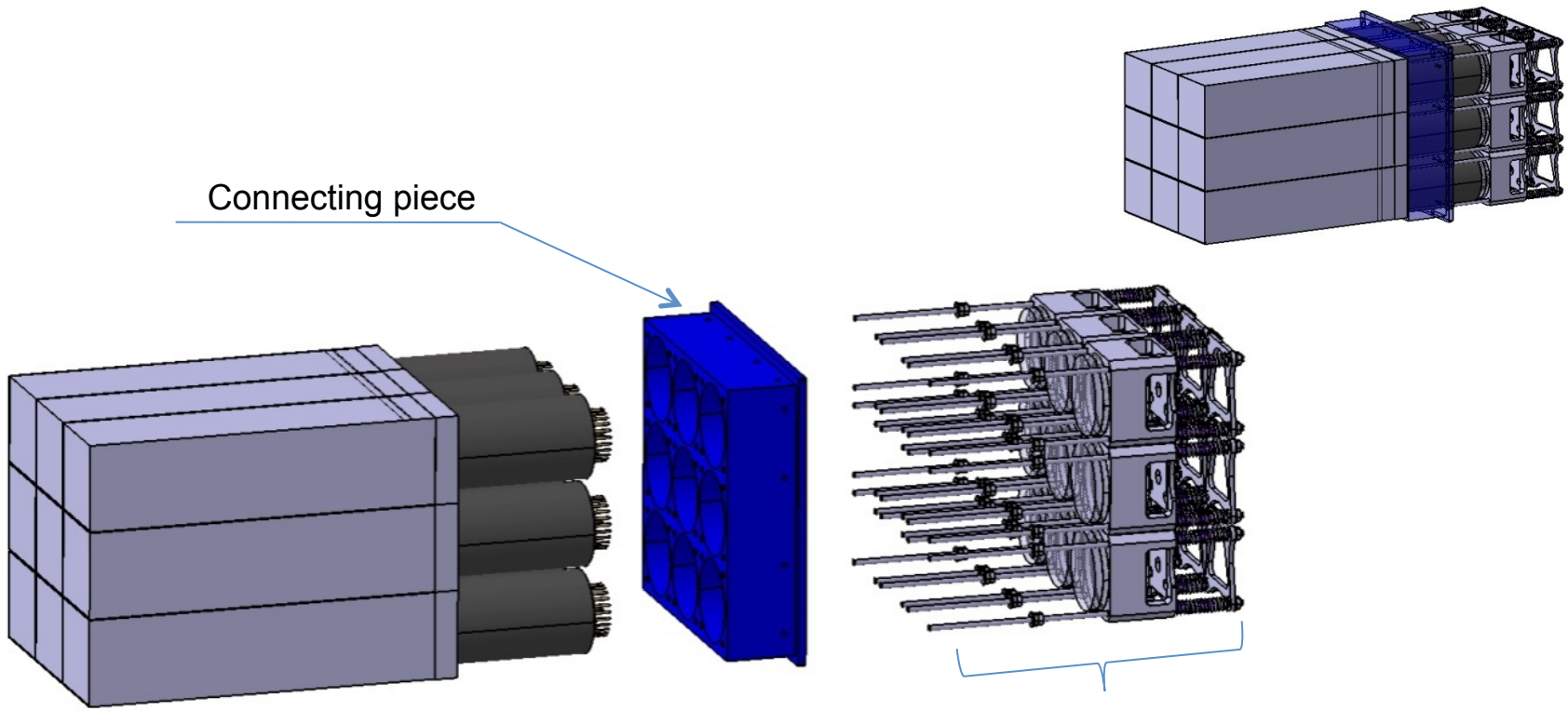

- Drawback: during mounting, no pressure between PMT and crystal (might loose optical connection if optical grease is used)

Front magnetic field mounting

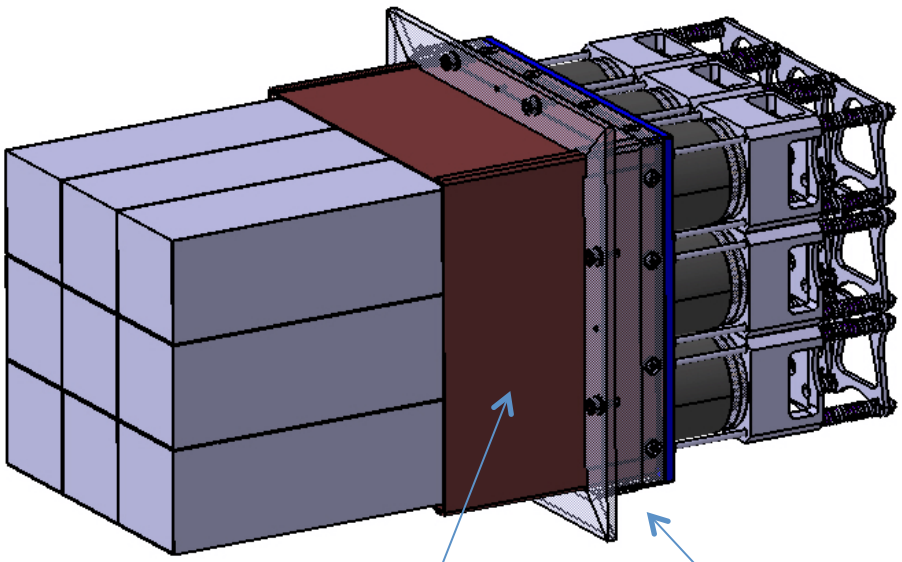

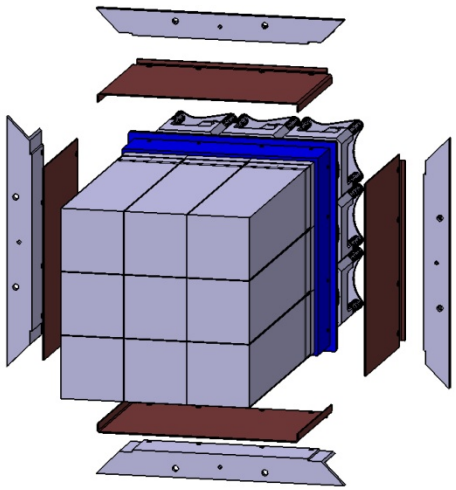

Front magnetic shield
(4 independant parts)

Frame for μ shield fixation

Rear magnetic field mounting

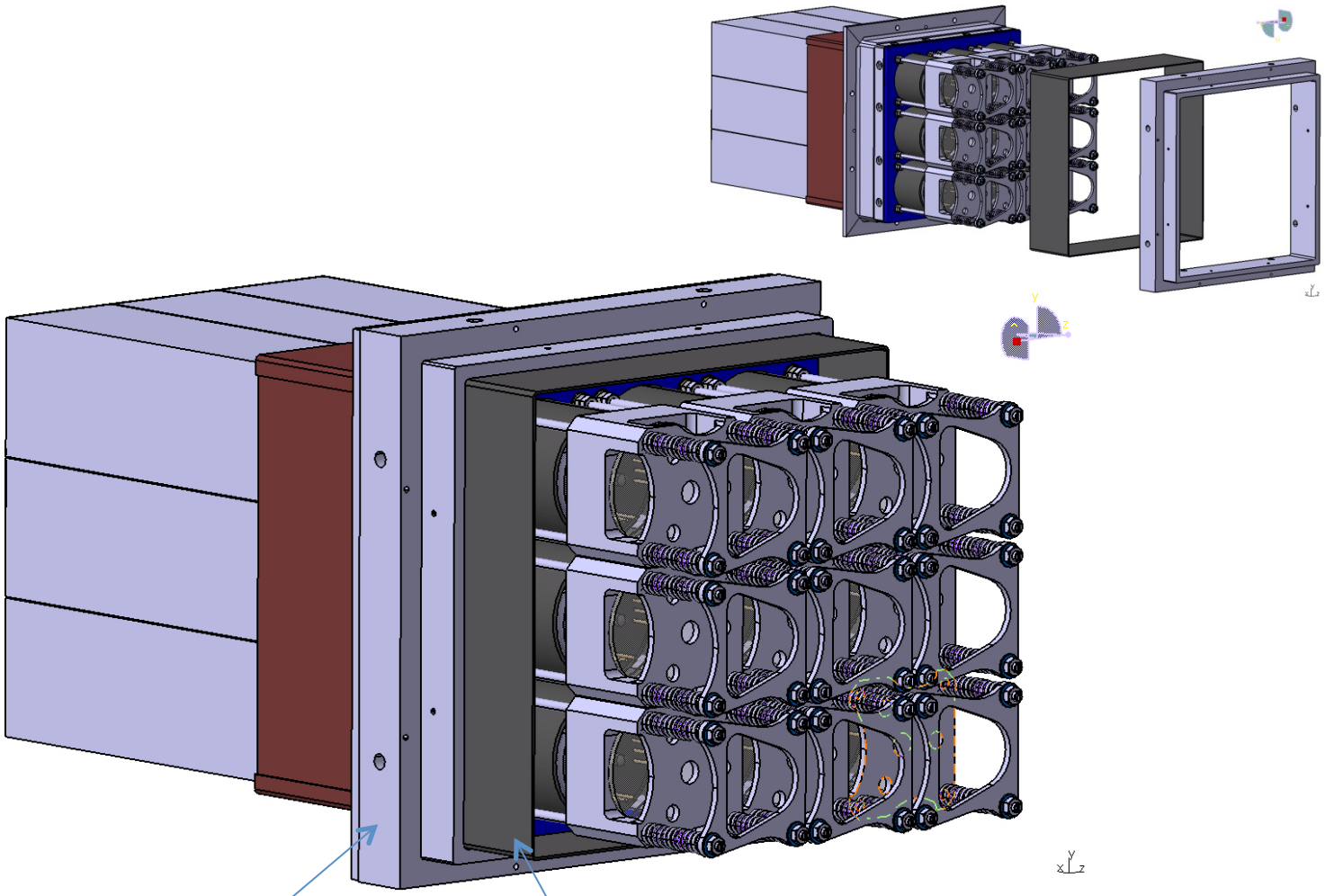

Main support frame

Rear magnetic field

Assemblage Ecran capot de protection avant

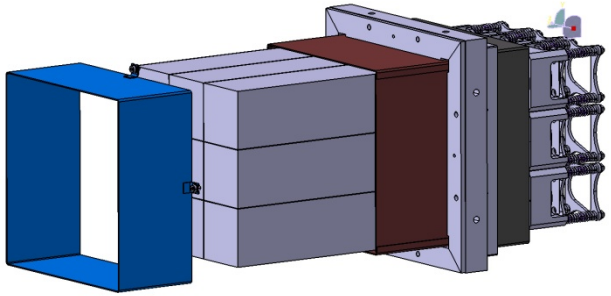

4 fixation screws

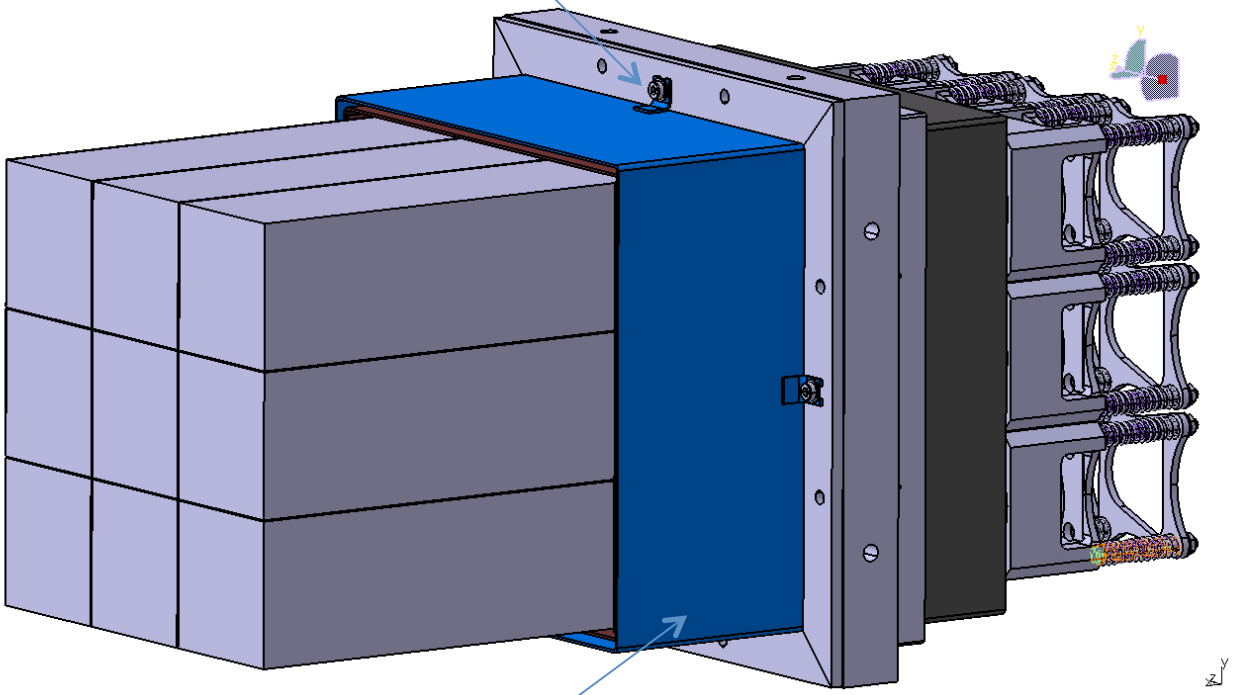

Front protection cup

(Maybe mild steel for a better magnetic shielding)

Rear cup mounting

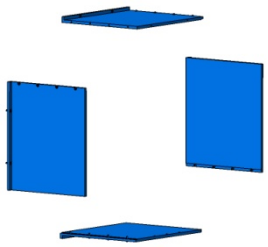

4 plaques usinées

Boitier assemblé par vis

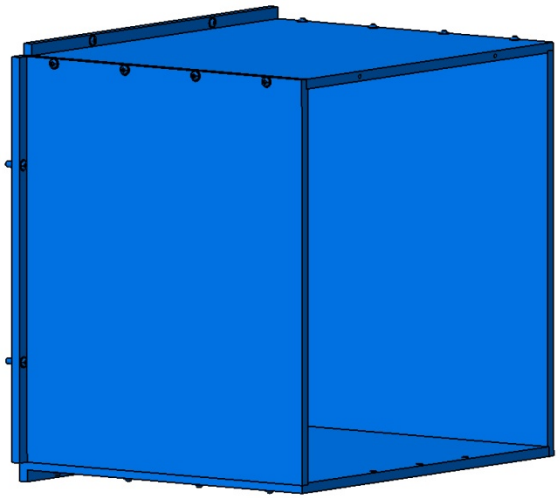

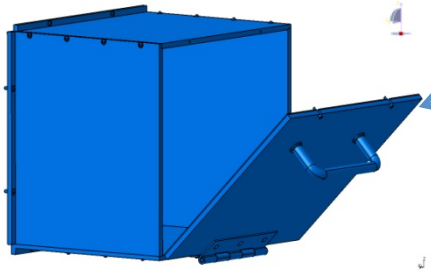

Assemblage de la porte

Capot pré-assemblé

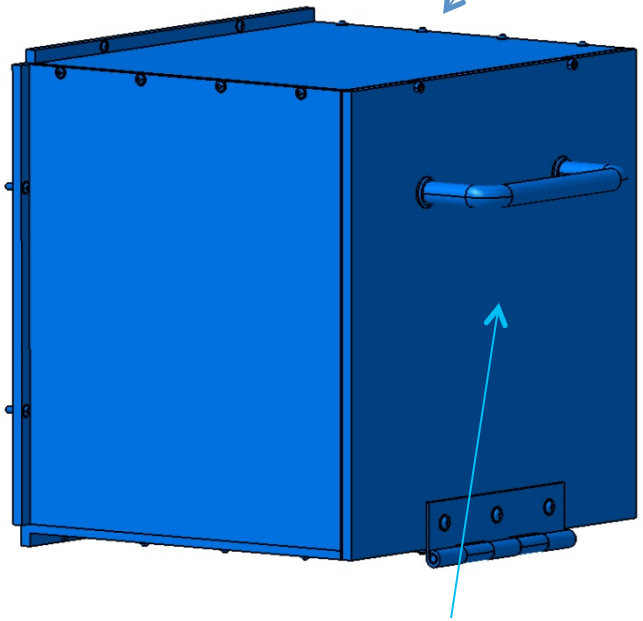

PMTs signal out/inputs : 1 HV, 2 outputs (?)

Rear cup mounting on the cluster

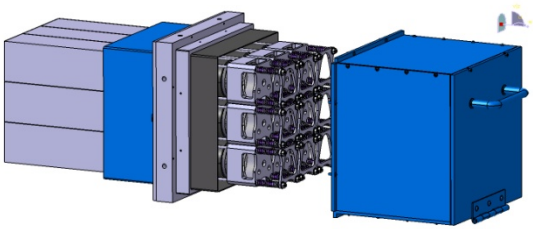

Fixation du capot par 8 vis

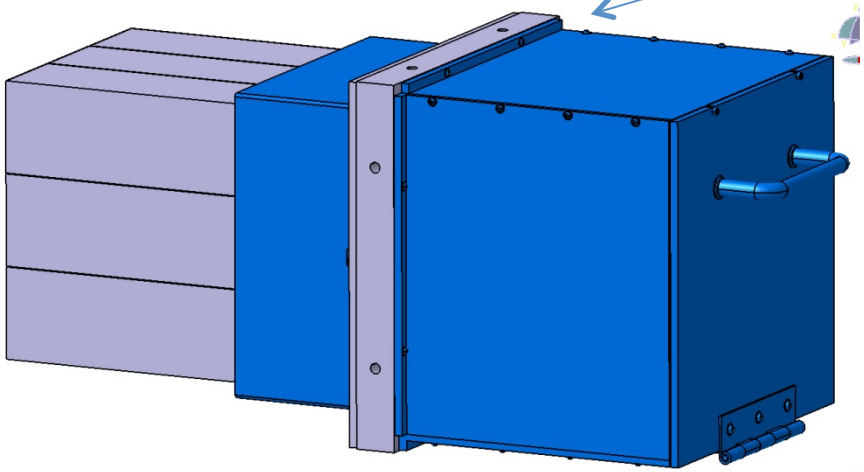

Porte d'accès au câblage des PM

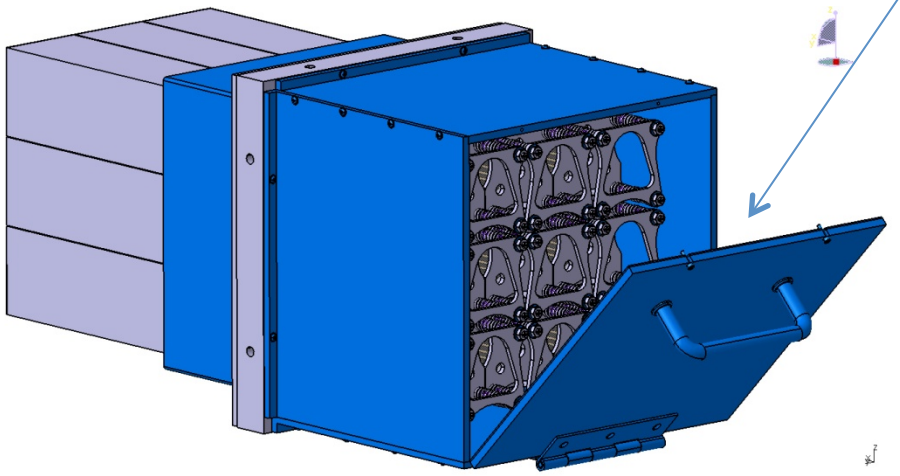

Cluster mounting on the support

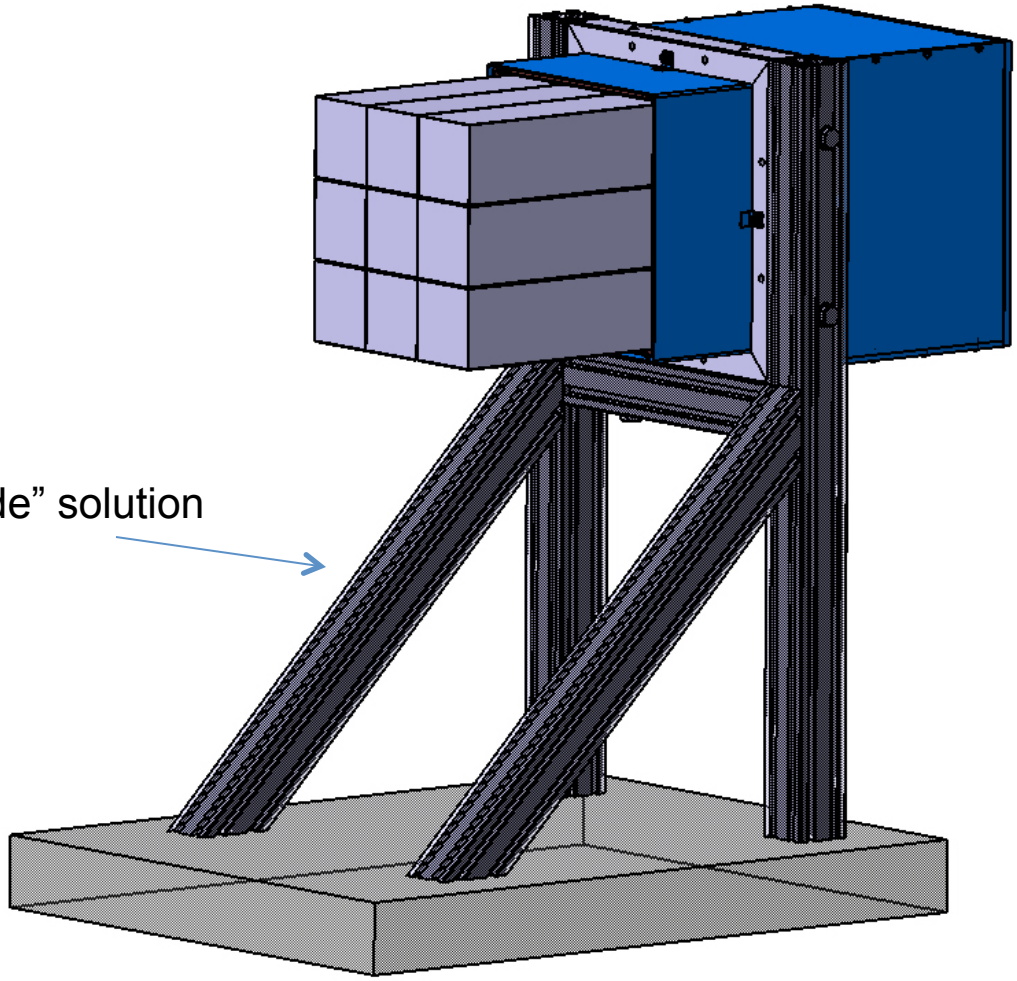

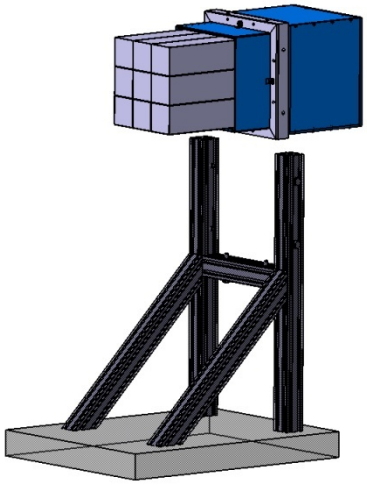

Easy “home made” solution

Remarks on the mechanical conception for the prototype

☺ μ shielding
☺ Relatively easy to dismount
☺ Variable number of mounted detectors (1 to 9)
☺ PMTs cables easy of access

☹ No pressure on PMT while mounting/dismounting the cluster (optical connection pbs)
☹ Minimum distance between 2 clusters : 54mm (! Prototype design !)

😐 Need to define the basic module for the transportation

Today:
4(+1) phoswichs at IPNO
5+2 R7723-100 PMT at IPNO
March-April:
9 more phoswichs in France
10 R7723-100 PMTs
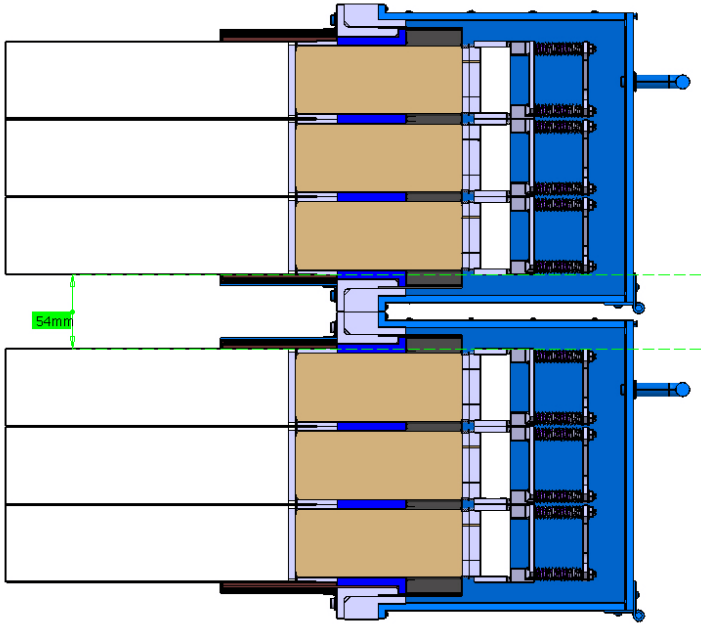
Can start the fabrication